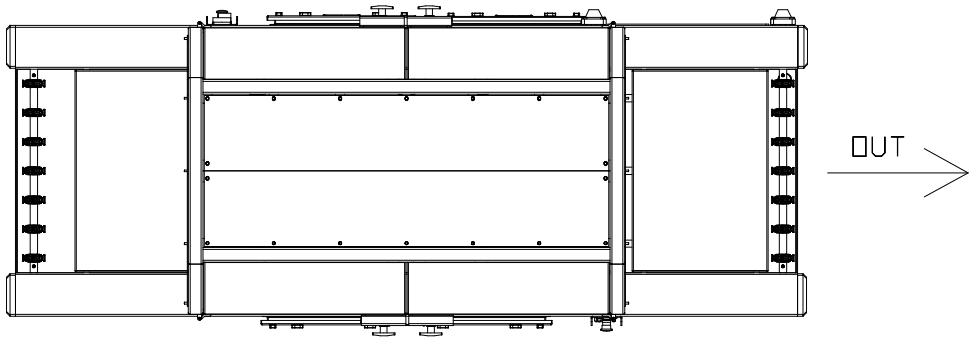

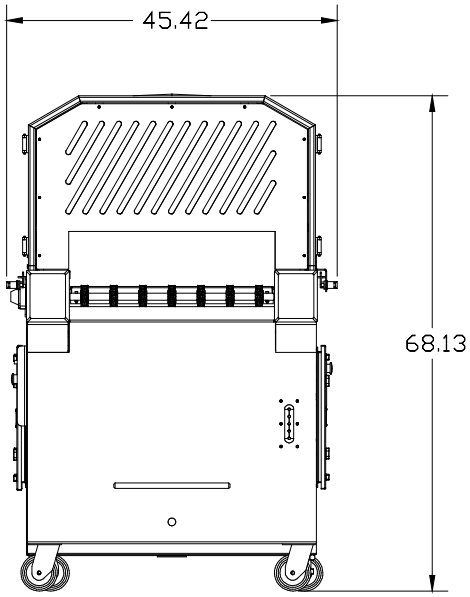

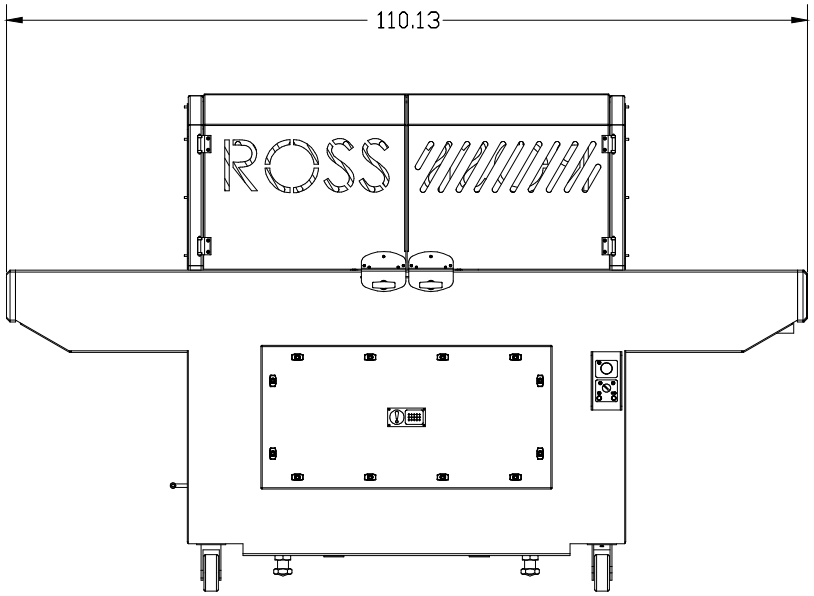

NOTES :
1. REMOVE ALL SHARP EDGES.
2. MATERIAL SEE B.O.M.
3. FINISH N/A
4. PART MARK

THE INFORMATION CONTAINED IN THIS DRAWING IS THE SOLE PROPERTY OF ROSS INDUSTRIES INCORPORATED. ANY REPRODUCTION IN PART OR AS A WHOLE WITHOUT THE WRITTEN PERMISSION OF ROSS INDUSTRIES INC. IS PROHIBITED.

TOLERANCES UNLESS SHOWN XXX ± .005 (.13 mm) XX ± .030 (.76 mm) X/X ± 1/32 (.8 mm) ANGLE ± 0°30' FINISH 125√ (3.2)	ROSS INDUSTRIES INC. VIRGINIA, USA				
	TITLE MACHINE, WIDE TENDERIZER				
	DATE 9/28/05	SCALE FULL	SIZE D	PART NO. 700W-1003CH	REV. –
DIMENSIONS & TOLERANCES PER ANSI Y14.5-1982	DES CH	DRN CH	CHK		